TC5020-12MP 4/3” f=50mm F/2.0 12Megapixel Lens

SPECIFICATIONS

MODEL NUMBER		TC5020-12MP	FILTER SIZE	M40.5X0.5
IMAGE FORMAT		4/3-inch	DIMENSIONS	ϕ44.6x 53.7mm
FOCAL LENGTH		50mm	WEIGHT	170g
MAXIMUM APERTURE		F1:2.0	OPERATING TEMPERATURE	-10°C -+50°C
APERTURE RANGE		F2.0-22	MOUNT	C-mount
M.O.D.		0.3m	FLANGE BACK	17.526mm
ANGLE OF VIEW	HORIZONTAL	20.9 °	BACK FOCAL LENGTH	20.29mm
(at 4/3 inch)	VERTICAL	15.7 °		12Megapixel

UP to 4.7micron.
CMV8000(5.5micron) AI-08050(5.5micron)
KAI-10100(4.75micron) KAC-12040(4.7micron)

DIMENSIONS

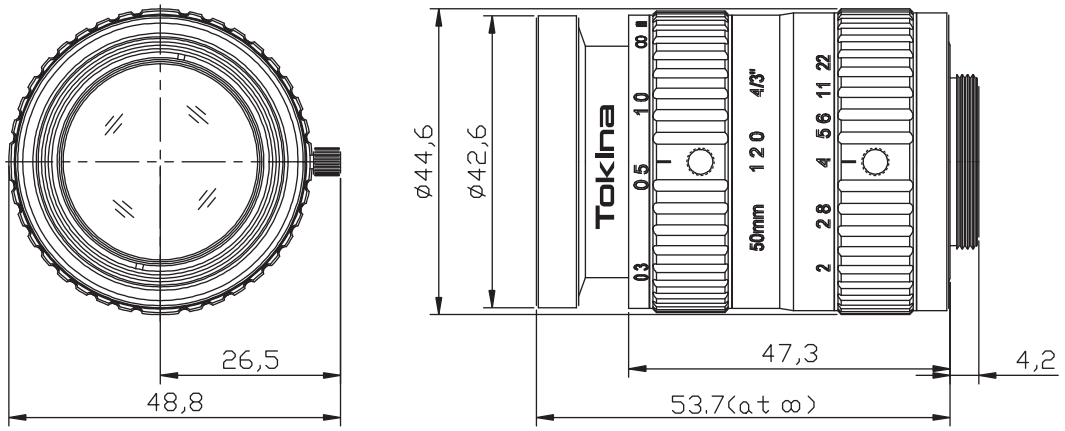

UNIT: mm